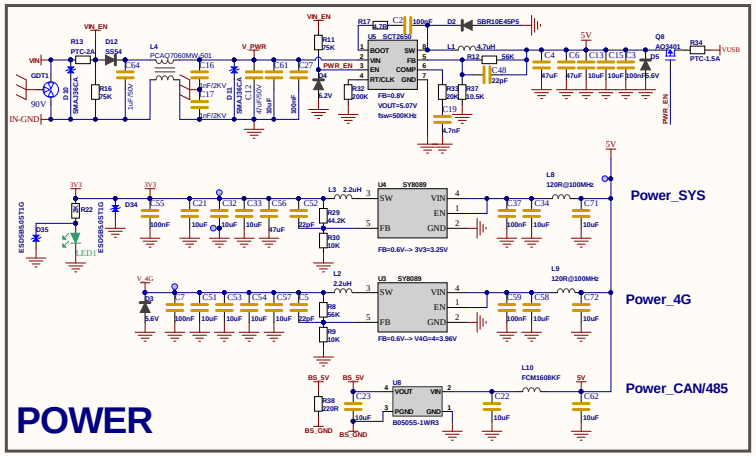

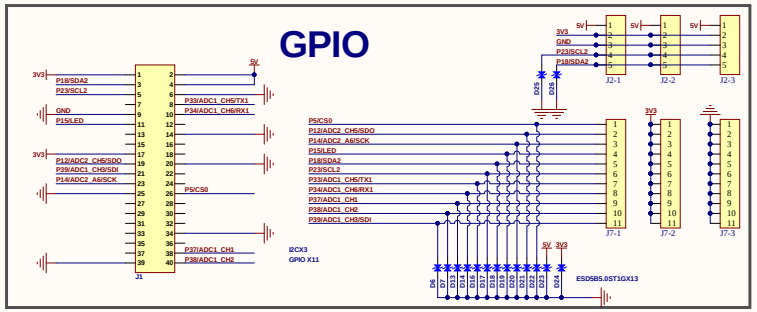

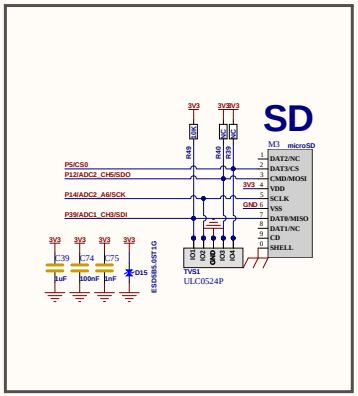

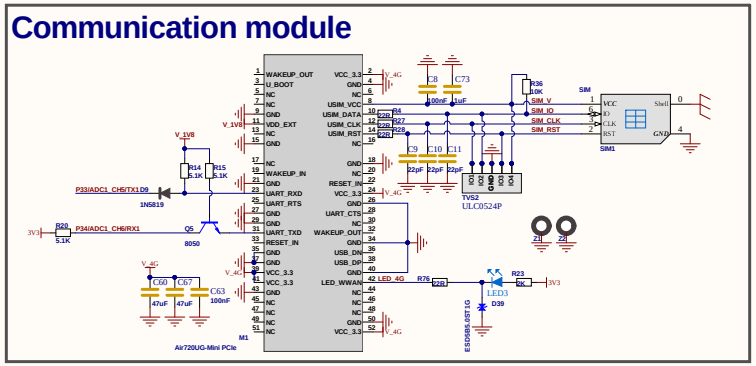

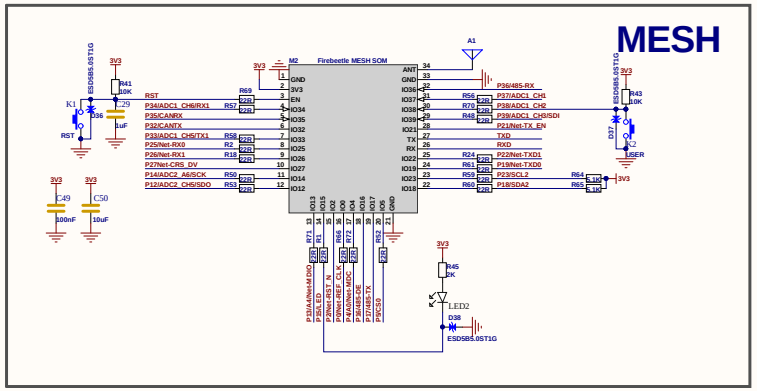

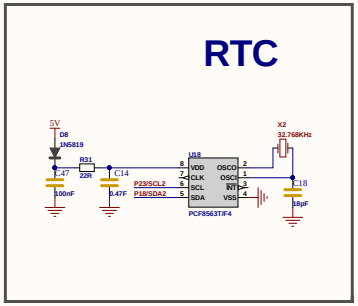

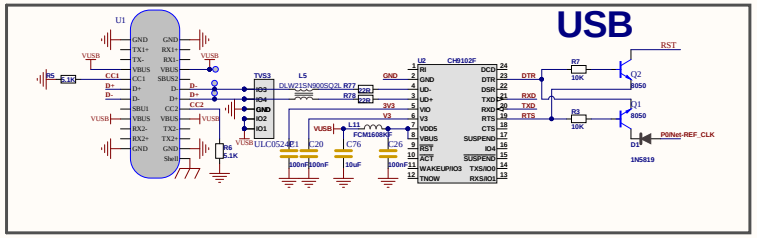

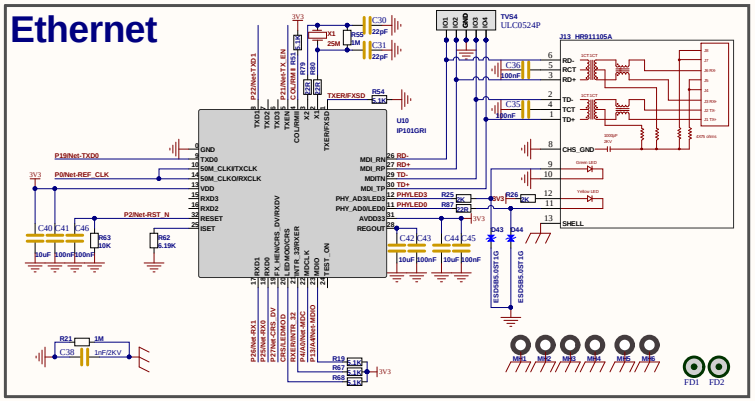

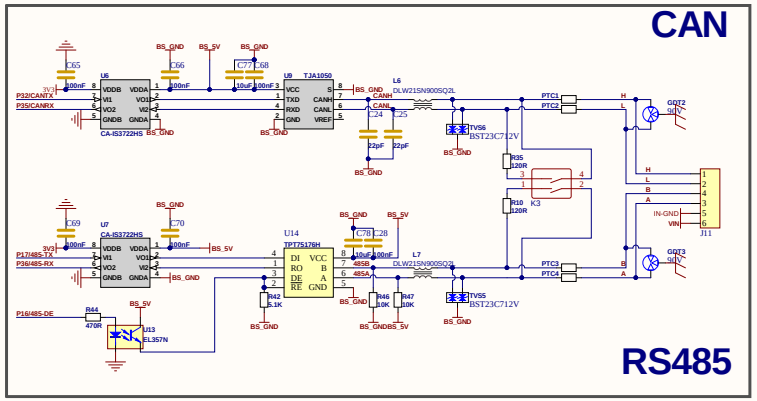

Title: Edge101WE IIoT Mainboard		Code: DFR0886	
Drawn: lfwang-CD	Revision: V1.0	Size: A2	
Page: 1 of 1	Date: 2022/8/5	Time: 11:05:37	